VP

High Technology

VP Internal Gear Pump





Flow rate: Up to 365 m3/Hr

Differential Pressure: up to 17 bar*

Temperature: -85°C to 430°C

Viscosity: 0.1 mPas to 440,000 mPas (cst)

Material of Construction: DI, CS, 304 SS, 316 SS, 316L SS, Alloy 20 & More

Pump Construction and Features

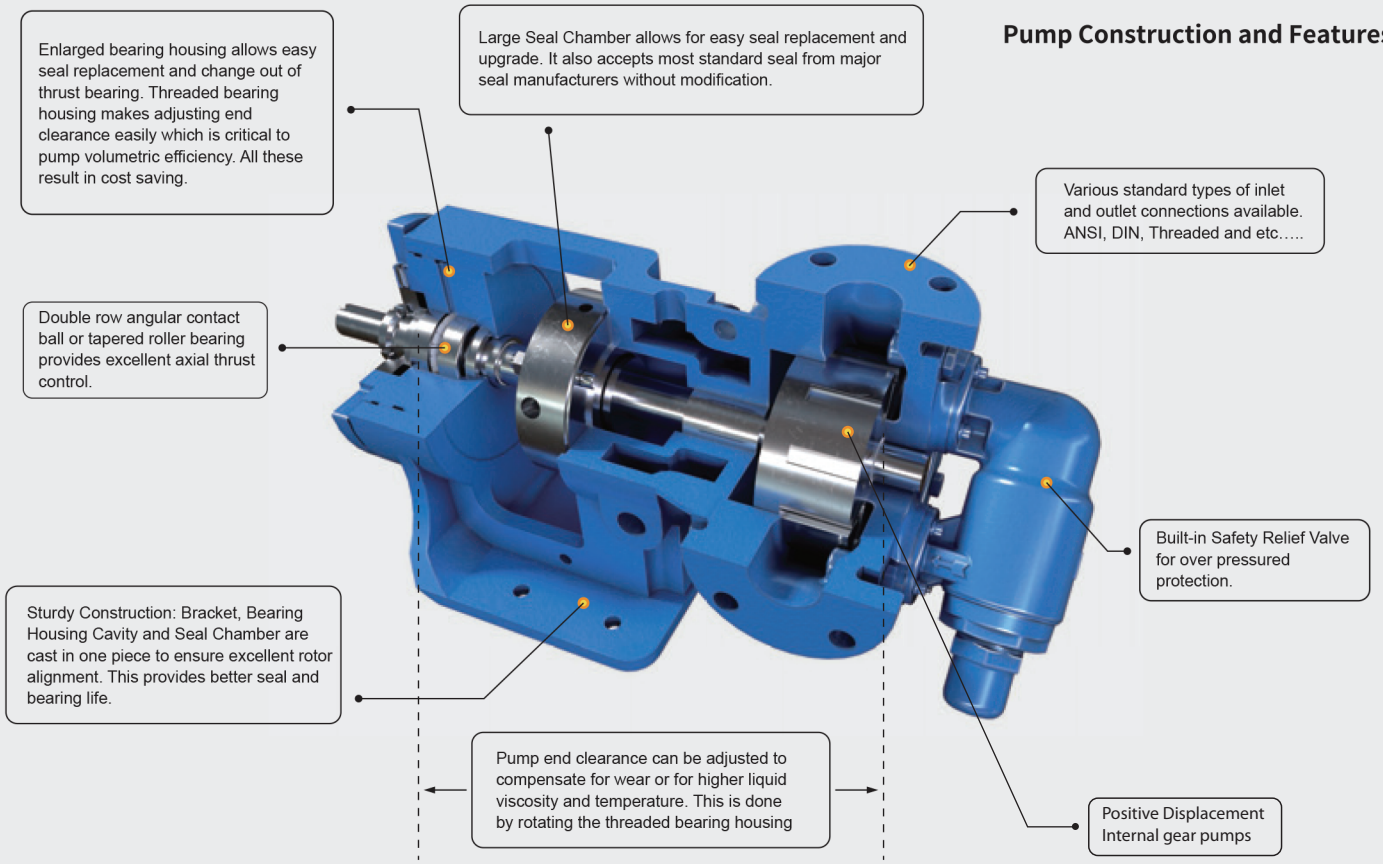

Seal Type Option:
1-High temperature packing seal
2-High strength graphite packing seal
3-Food grade packing seal
4-Component type mechanical seal: Single seal,double seal
5-Cartridge type mechanical seal: Single seal,double seal
6-Cartridge type high performance three lip seal
7-Magnetic sealless

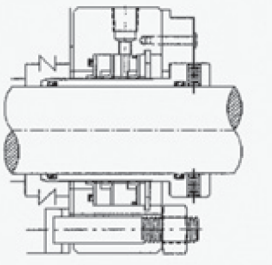

Cartridge type three lip seal

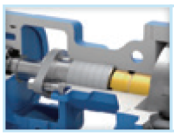

PACKING



COMPONENT MECHANICAL SEAL



CARTRIDGE SEAL



API 682 SEAL

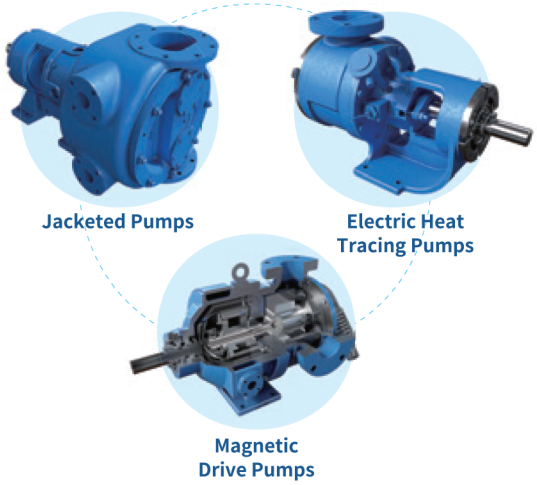

A variety of seal flushing options are available:
Plan 11, Plan13, Plan32, Plan52, 53, 54.ect

All U series pumps are equipped with pump casings that can be positioned to meet common piping configurations.
Smaller size pump has standard 90° ports ,180° ports available in some materials.
6" and above size pump has standard 180° ports.
Direction of flow is reversible so any given port can be used as suction or discharge.
See Optional Casings tables for available port options.

Plug-in Electric Heating Pump

Structure Features:

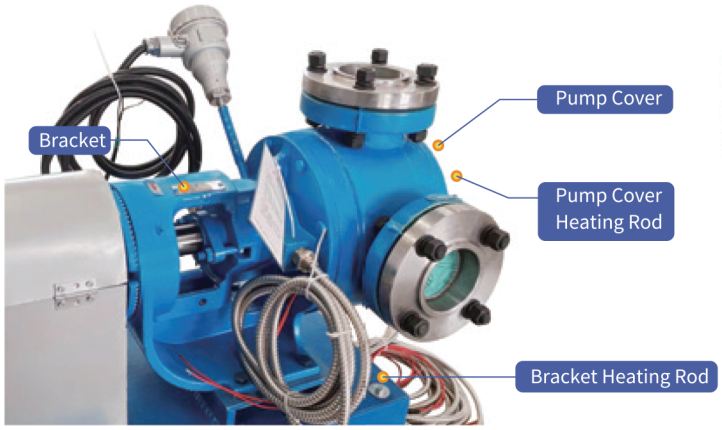

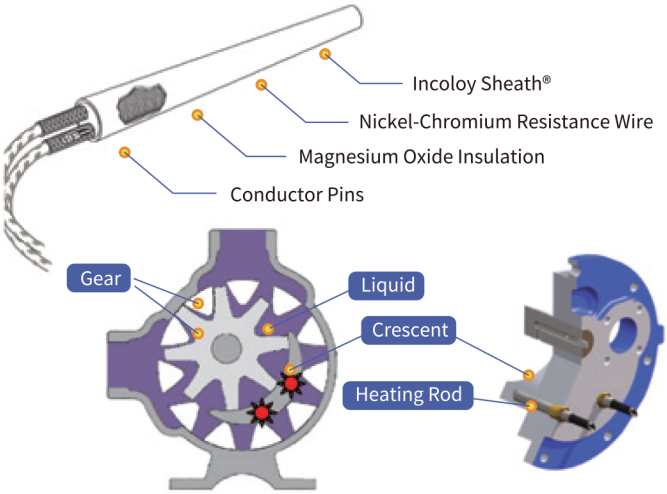

Features:

Electric Heating Pump is a good alternative if hot oil or steam is not available to heat up the liquid in the pump. Electric Heating Pump provides the most efficient heating, hence saving energy cost.



Automatic Temperature Control:

Heating temperature can be set from local or remote controller. The temperature sensor and controller communication can maintain the pump temperature at the setting point. Maximum 250 °C

API676 Standard Pumps

A pump truly meets API 676 standard
API 682 Seal can be installed in U series pump.
Enlarge bearing housing for easy disassembly and maintenance
Good choice for heavy duty application

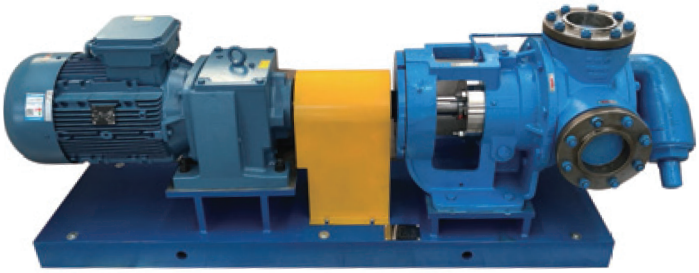

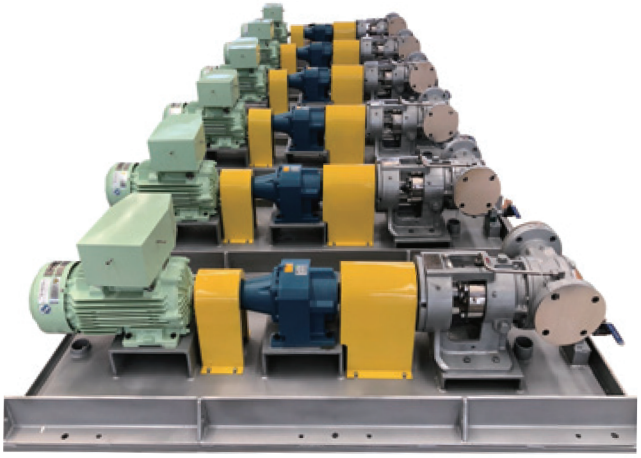

VP
High Technology



- **Non-jacket pump:**
  Widely used in many application in various industries.
- **Jacketed pump:**
  Widely used in the liquids that require heating
- **Application industries:**
  Lubricants,polymers,chemical fibers,resins,petroleum,asphalt,binders,fuel oil,gluse,paints,coatings food,pulp,detergents and various chemicals,etc.
- **Working range:**
  Flowrate: Max. 363m^3/h
  Pressure: 0~17Bar
  Viscosity: 0.1 mPa.s~440,000mPa.s (cst)

Performance Data

Model No.		Port Size	Process Parameters	Flow (m^3/h)	Speed (RPM)	Shaft Power (kw)	Viscosity (cst)	Temperature (°C)	Diff.Pre (Bar)	Weight(KGS)	
Model	Size	inch								Bare Pump	Pump Unit
UF	40	1.5	Work Scope	0.5-3.6	84-1450	0.1-2.2	0.1-440,000	-85~430	0-17	17	80
			Nominal Value	2.1	950	1.55	2,000	200	8		
UH	40	1.5	Work Scope	1-7.3	125-1450	0.3-3.6	0.1-440,000	-85~430	0-17	20	95
			Nominal Value	4	950	2.24	2,000	200	8		
UN	50	2	Work Scope	2-13.6	56-750	0.75-5.3	0.1-440,000	-85~430	0-17	48	150
			Nominal Value	8.2	350	3.15	2,000	200	8		
UNN	50	2	Work Scope	2-23	84-750	0.75-12.5	0.1-440,000	-85~430	0-17	55	165
			Nominal Value	10.5	343	3.65	2,000	200	8		
UP	50	2	Work Scope	3-33.6	56-640	0.75-15	0.1-440,000	-85~430	0-17	70	250
			Nominal Value	18	346	7.76	2,000	200	8		
UQ	65	2.5	Work Scope	3-33.6	56-640	0.75-15	0.1-440,000	-85~430	0-17	80	290
			Nominal Value	18.2	350	7.87	2,000	200	8		
UR	80	3	Work Scope	3-34	84-520	0.75-16.5	0.1-440,000	-85~430	0-17	84	340
			Nominal Value	23	355	9	2,000	200	8		
US	80	3	Work Scope	6.8-50	48-600	1-18.5	0.1-440,000	-85~430	0-17	91	380
			Nominal Value	28	358	9.55	2,000	200	8		
UT	100	4	Work Scope	6-68	84-520	1-26.3	0.1-440,000	-85~430	0-17	200	560
			Nominal Value	45	312	17.7	2,000	200	8		
UU	150	6	Work Scope	18-110	50-350	3.75-37.5	0.1-440,000	-85~430	0-17	250	650
			Nominal Value	70	325	24	2,000	200	8		
UW	150	6	Work Scope	22-135	84-410	7.5-56	0.1-440,000	-85~430	0-17	367	800
			Nominal Value	100	230	39	2,000	200	8		
UWL	150	6	Work Scope	30-208	40-280	18-101	0.1-440,000	-85~430	0-17	367	800
			Nominal Value	150	202	69	2,000	150	8		
UX	200	8	Work Scope	25-250	56-280	18-112.5	0.1-440,000	-85~430	0-17	651	1300
			Nominal Value	200	220	82.5	2,000	150	8		
UY	250	10	Work Scope	45-363	56-280	25-135	0.1-440,000	-85~430	0-9	1220	2100
			Nominal Value	250	230	113	2,000	150	8		

① Temperature range: -51°C~343°C, C.S: -29°C~450°C, S.S: -84°C~260°C
② Pump inlet and outlet connection type: NPT, ANSI150#F.F
ANSI300#F.F
③ Hydraulic pressure test: 32Bar
④ Pump model description: Jacket pump + "J", electric heat tracing pump + "E", 682 pump + "AA"

U Series Non-jacketed Pump Dimension Drawing



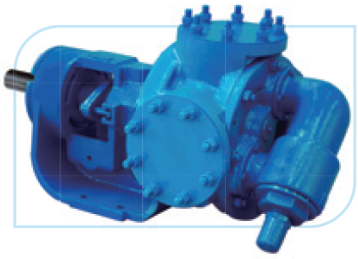

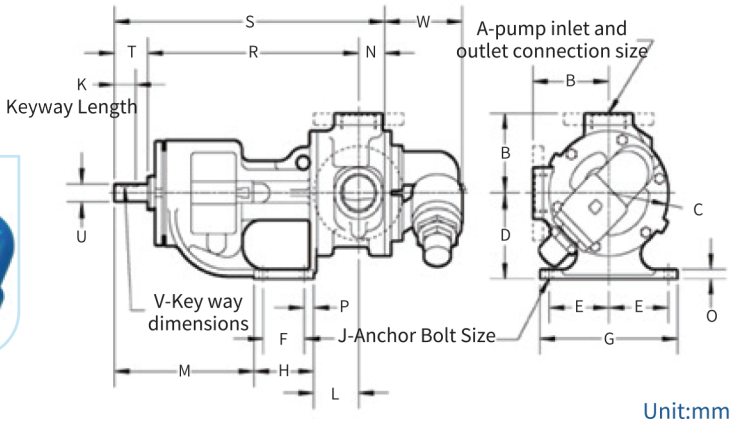

Unit:mm

Model	A	B	C	D	E	F	G	H	J	K	L	M	N	O	P	R	S	T	U	V	W
UF-40 UH-40	1.5" NPT	76.2	120.6	88.9	69.8	57.1	171.4	88.9	11.9	25.1	85.8	131.8	30.2	14.2	15.7	265.2	336.5	41.1	19	4.83 x 2.29	72.4
	1.5"ANSI 150#F.F	101.6																			
UN-50 UNN-50	2" NPT	130	203.2	139.7	101.6	69.8	234.9	101.6	13.5	36.1	76.2	238.3	44.4	15.7	15.7	358.6	460.2	57.1	28.4	6.35 x 3.05	133.3
	2"ANSI 150#F.F	133.3																			
UP-50	2" NPT	165.1	260.3	177.8	111.3	101.6	254	136.7	13.5	50.8	85.9	231.6	44.4	15.7	15.7	396.7	498.3	57.1	28.7 36.6	6.35* x 3.05	137.9
UQ-65	2.5"ANSI 150#F.F	182.6	260.3	177.8	111.3	101.6	254	136.7	13.5	50.8	85.9	231.6	44.4	15.7	15.7	396.7	498.3	57.1	28.7 36.6	6.35* x 3.05	137.9
UR-80	3"ANSI 150#F.F	182.6	260.3	177.8	111.3	101.6	254	136.7	13.5	50.8	85.9	231.6	57.1	15.7	15.7	396.7	511	57.1	28.7 36.6	6.35* x 3.05	137.9
US-80	3"ANSI 150#F.F	182.6	260.3	177.8	111.3	101.6	254	136.7	13.5	64.8	120	231.6	62	15.7	15.7	400	550.9	88.9	36.6	9.65 x 4.83	137.9
UT-100	4"ANSI 150#F.F	209.5	335.6	222.2	104.6	101.6	254	152.4	17.5	90.9	168.1	282.4	76.2	19	25.4	488.9	679.4	114.3	49.3	12.7 x 6.35	209.5

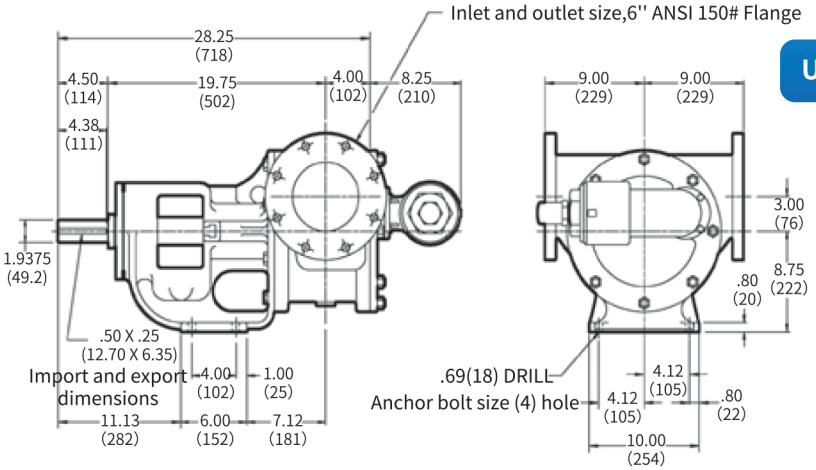

UU Size Non-jacketed Pump Dimension Drawing

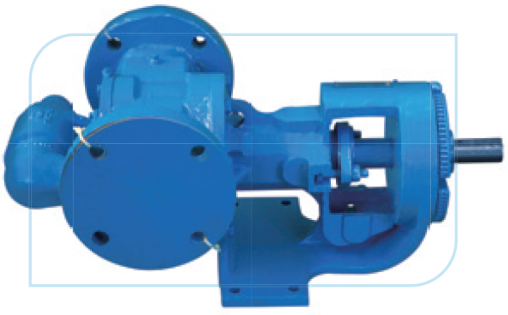

UU Jacketed Pump Dimension Drawing

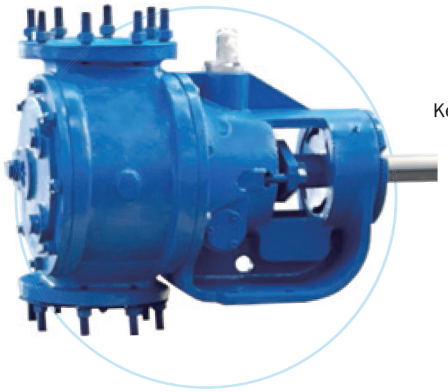

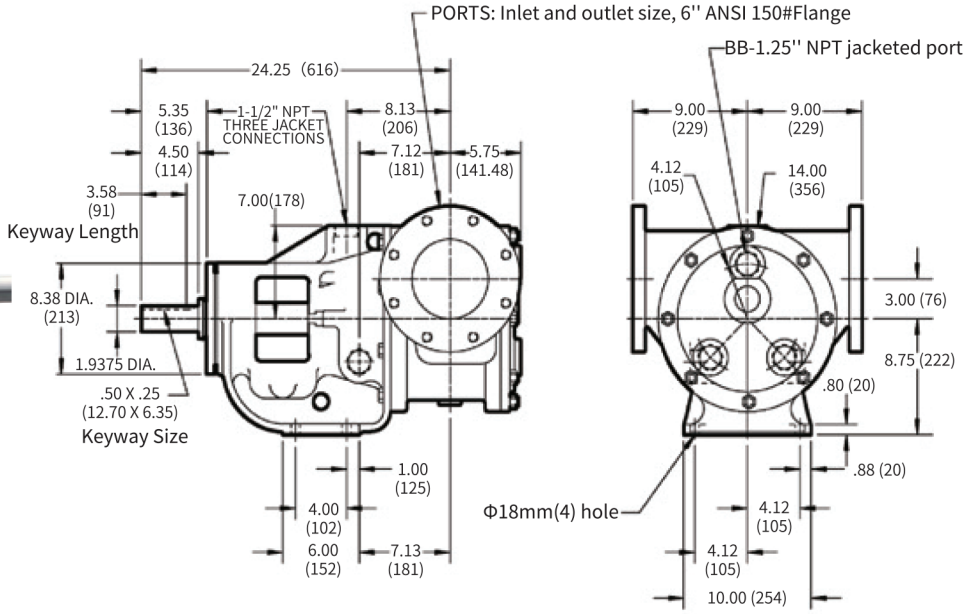

UW UX UY Bare Pump Dimension Drawing

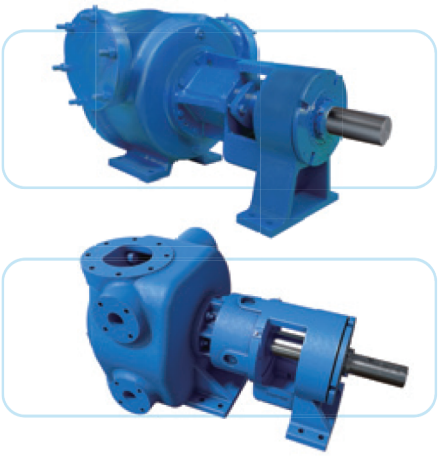

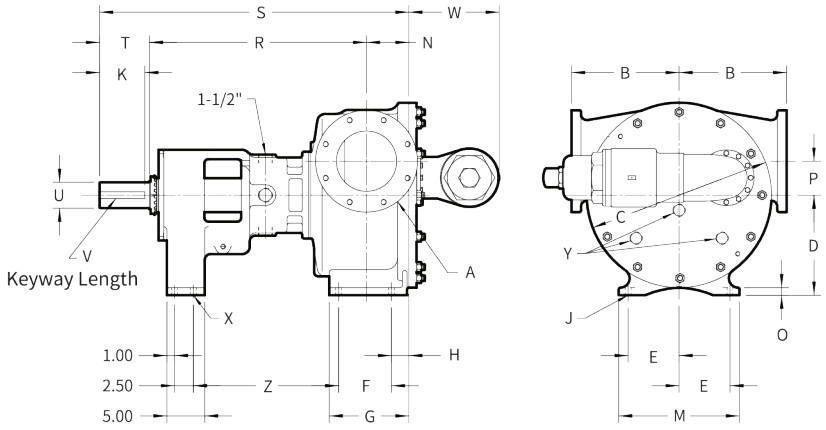

Unit:mm

Model		A	B	C	D	E	F	G	H	J	K	M	N	O	P	R	S	T	U	V	W	X	Y	Z
U	W-150	6"ANSI 150#F.F	248	438	241	127	158	220	41.1	17.5	114.3	304	114.3	25.4	76.2	660	927.1	152	62	15.7 x 7.87	219	17.5	-	481
U	WL-150	6"ANSI 150#F.F	330	560	336.6	171.5	178	267	52.5	20	152	419	133.5	28.5	108	727	1028	167	87.3	22.3 x 11.18	224	22	1"N PT	480.8
U	X-200	8"ANSI 150#F.F	361	622	336	171	177	268	58.7	19.8	152	406	142	25.4	114.3	730	1041	168	87.4	22.3 x 11.18	304	17.5	31.7	488.9
U	Y-250	10"ANSI 150#F.F	361	622	336	171	177	333	122	22	152	418	206	33	114.3	725	1104	168	87.4	22.3 x 11.18	304	22	31.7	488.9

U Series Jacketed Bare Pump Dimension Drawing

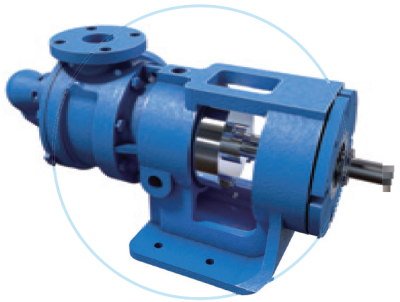

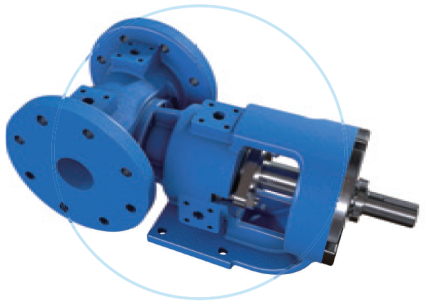

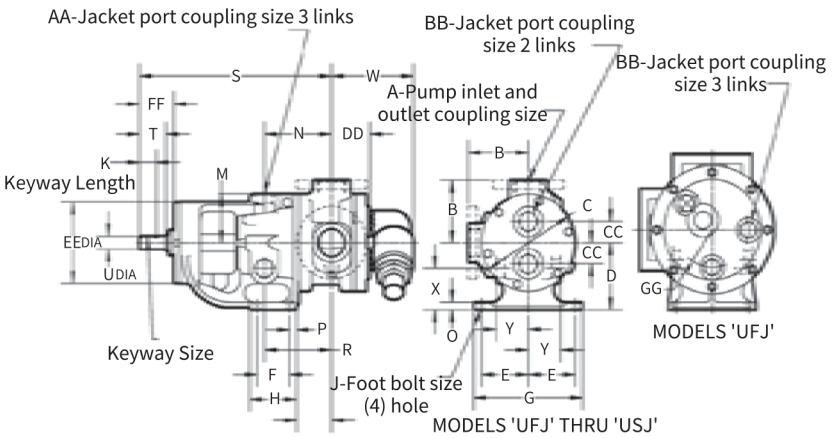

Unit:mm

Model	A	B	C	D	E	F	G	H	J	K	L	M	N	O	P	R	S	T	U	V	W	X	Y	AA	BB	CC	DD	EE	FF
UFJ-40	1.5" NPT	76.2	120.6	88.9	69.8	57.1	171.4	88.9	11.9	25.1	85.8	60.5	101.6	14.2	15.7	101.6	306.3	41.1	19	4.83 X 2.29	102.6	45.7	46.5	19	12.7	23.9	61.2	146	58.4
UHJ-40	1.5"ANSI 150#F.F	101.6																											
UNJ-50	2" NPT	130	203.2	139.7	101.6	69.8	234.9	101.6	13.5	36.1	76.2	101.6	146	15.7	15.7	146	416	57.1	28.4	6.35 x 3.05	177.8	85.9	69.8	31.7	31.7	44.4	82.5	171.4	74.2
UNNJ-50	2"ANSI 150#F.F	133.3																											
UPJ-50	2" NPT	165.1	260.3	177.8	111.3	101.6	254	136.7	13.5	50.8	85.9	130	166.6	15.7	15.7	166.6	454.2	57.1	28.4	6.35* x 3.05	182.4	117.3	82.5	31.7	25.4	76.2	96.8	171.4	74.4
UQJ-65	2.5"ANSI 150#F.F	182.6	260.3	177.8	111.3	101.6	254	136.7	13.5	50.8	85.9	130	166.6	15.7	15.7	166.6	454.2	57.1	28.4	6.35* x 3.05	182.4	117.3	82.5	31.7	25.4	76.2	96.8	171.4	74.4
URJ-80	3"ANSI 150#F.F	182.6	260.3	177.8	111.3	101.6	254	136.7	13.5	50.8	85.9	130	166.6	15.7	15.7	166.6	454.2	57.1	28.4	6.35* x 3.05	182.4	117.3	82.5	31.7	25.4	76.2	109.5	171.4	74.4
USJ-80	3"ANSI 150#F.F	182.6	260.3	177.8	111.3	101.6	254	136.7	13.5	64.8	120.6	130	188	15.7	15.7	177.8	488.9	88.9	36.58	9.65 x 4.83	196.1	111.8	83.8	31.7	25.4	76.2	114.3	177.8	102.4
UTJ-100	4"ANSI 150#F.F	209.6	355.6	222.2	104.6	101.6	254	152.4	17.5	90.9	168.1	177.8	193.5	19	25.4	168.1	603.2	114.3	49.3	12.7 X 6.35	285.7	139.7	114.3	38.1	31.7	-	116.1	212.8	135.9

WINSTON ENGINEERING

Asia's Pump Industry **Leader**
WINSTON ENGINEERING

WinstonEngineering.com

WINSTON ENGINEERING CORPORATION (Group of Companies)



Winston Engineering Corpn Pte Ltd
Singapore Regional HQ
1 Joo Koon Way Singapore 628942
t 65 6863 3338
f 65 6863 1680 *(Sales)*
65 6898 3338 *(Admin)*
e marketing@winstonengineering.com.sg



PT. Winston Indonesia
Indonesia HQ
Pergudangan Prima Center 2 Blok D No.5
Jl. Pool PPD Pesing Poglar, Jakarta 11710
t 6221 2903 1022 (Hunting)
f 6221 2903 1024
e sales@winstonindonesia.co.id



Winston Engineering Corpn. Sdn. Bhd.
Malaysia HQ
Lot 13 & 15 Jalan Pemberita U1/49, Temasya
Industrial Park 40150 Shah Alam, Selangor
t 603 5569 1723
f 603 5569 1251
e winston@winstonengineering.com.my



Shanghai Dahui Engineering Co., Ltd
Shanghai HQ
No. 1525, Min Qiang Road, Block 12, Song Jiang
District, Shanghai P.R.China, 201612
t 86 21 5763 5898
f 86 21 5763 5828
e marketing@winstonchina.com.cn

Winston Engineering Corpn. Sdn. Bhd.
Penang Branch
Lot 7, Lorong Teras Jaya 7, Kawasan Perniagaan
Teras Jaya 13400 Butterworth, Pulau Pinang
t 604 332 2339
f 604 332 8339
e winstonpg@winstonengineering.com.my

Beijing Darhui Engineering Co., Ltd
Beijing Branch
Floor 21, HongXiGe Mansion, 15 Jiajia Park,
No.8 Building, Fengtai District, Beijing City, 100079
t 86 10 6726 3995
f 86 10 6726 7262
e marketing@winstonchina.com.cn

Winston Engineering Corpn. Sdn. Bhd.
Johor Bahru Branch
No.8 Jalan Dewani, Off Jalan Tampoi
81100 Johor Bahru, Johor
t 607 334 3446
f 607 334 3428
e winstonjb@winstonengineering.com.my